Baxi Combi HE.

The new high efficiency range that's also highly recognisable.

Baxi Combi Instant 80 HE

Baxi Combi Instant 105 HE

Baxi Combi 105 HE

The Baxi name has been at the forefront of design innovation for many years. As part of the Baxi Group, the UK's leading heating company, we're specialists in gas boilers and fires. Whatever the heating problem, we have an energy efficient, environmentally friendly solution. This pre-eminence in design innovation has led Baxi to become one of the most highly respected names in combination boilers. Our combi's are not just tried and tested, but trusted, with a whole host of industry-leading features which set them apart from the competition. The success of our new Baxi Combi HE range lies in the fact that we've managed to retain many of those features, whilst introducing ingenious new design modifications which fully embrace new high efficiency legislation. The result is the highly advanced, highly reliable new Baxi Combi Instant 80 HE, Baxi Combi 105 HE and Baxi Combi Instant 105 HE. A range which has one recognisable advantage over some high efficiency combi's. It's instantly recognisable.

You and HE.

The Government's Energy White Paper has introduced fresh challenges for the heating industry. From April 2005 (with some exclusions and exceptions), all boilers installed should be either SEDBUK Band A or SEDBUK Band B. Baxi has successfully met this challenge, with the introduction of the new Baxi Combi Instant 80 HE, the Baxi Combi 105 HE and the Baxi Combi Instant 105 HE. These boilers combine Baxi's industry-leading combi technology with SEDBUK Band B levels of efficiency, to meet the requirements of new legislation.

Baxi and HE.

At Baxi, we've dedicated more time, energy and resource to developing HE technology for combination boilers than any other manufacturer. Our engineers have taken the best features of three highly regarded Baxi Combi models – the Baxi Combi Instant 80e,105e and Instant 105e – and effected a seamless transition to models with a high efficiency SEDBUK B rating. With hot water flow rates from 9.8 to 12.1 litres per minute and central heating outputs from 24kW to 31kW, unrivalled instantaneous hot water technology (in the case of the Baxi Combi Instant 80 HE and Instant 105 HE), compact size and excellent flue versatility for ease of siting, Baxi Combi is leading the way into the high efficiency age.

Unbeatable heateam back up.

Should you ever need it, you'll be able to call on the finest technical back up and the widest spares network in the industry. With over 180 service engineers covering the whole of the UK, supported by dedicated teams of Call Centre support staff operating seven days a week, 363 days per year, heateam is the benchmark service for the industry. While to ensure easy installation and trouble free maintenance, Baxi Training also provides a range of courses available to all engineers who install or service Baxi appliances.

Baxi Combi HE. The inside story...

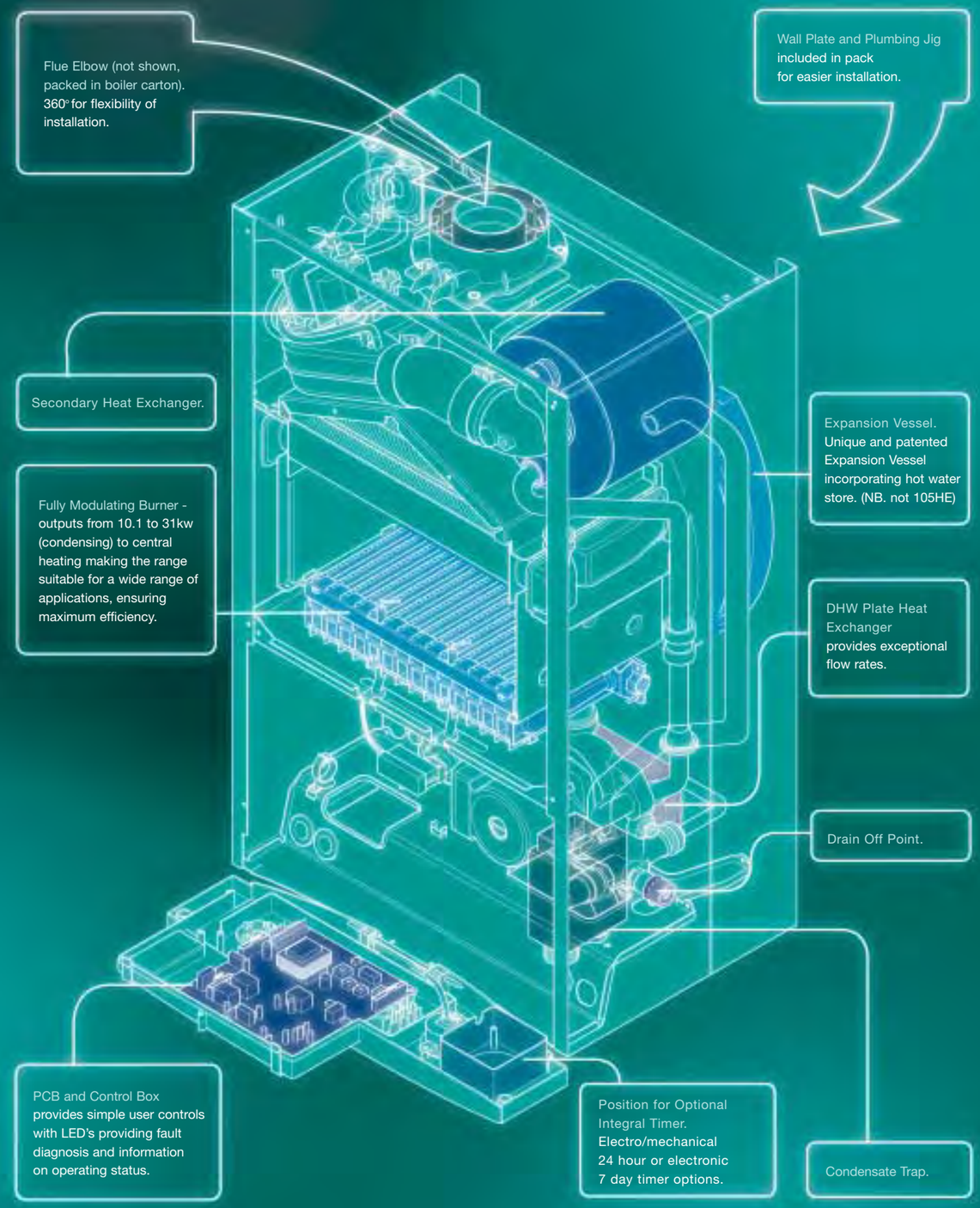

Baxi Combi 105 HE in close up.

The highly efficient, cost efficient boiler solution.

The Baxi Combi 105 HE combines instantly recognisable architecture with instantly appealing value for money. It has a modulating CH output of 11kW to 31kW, and its 12.1 litres per minute flow rate (at 35° temperature rise) is designed to satisfy the most demanding domestic hot water requirements. The boiler is rated SEDBUK Band B and comes with a pre-plumbing jig and wall plate to simplify and speed fixing. An integral timer is optional.

Layout

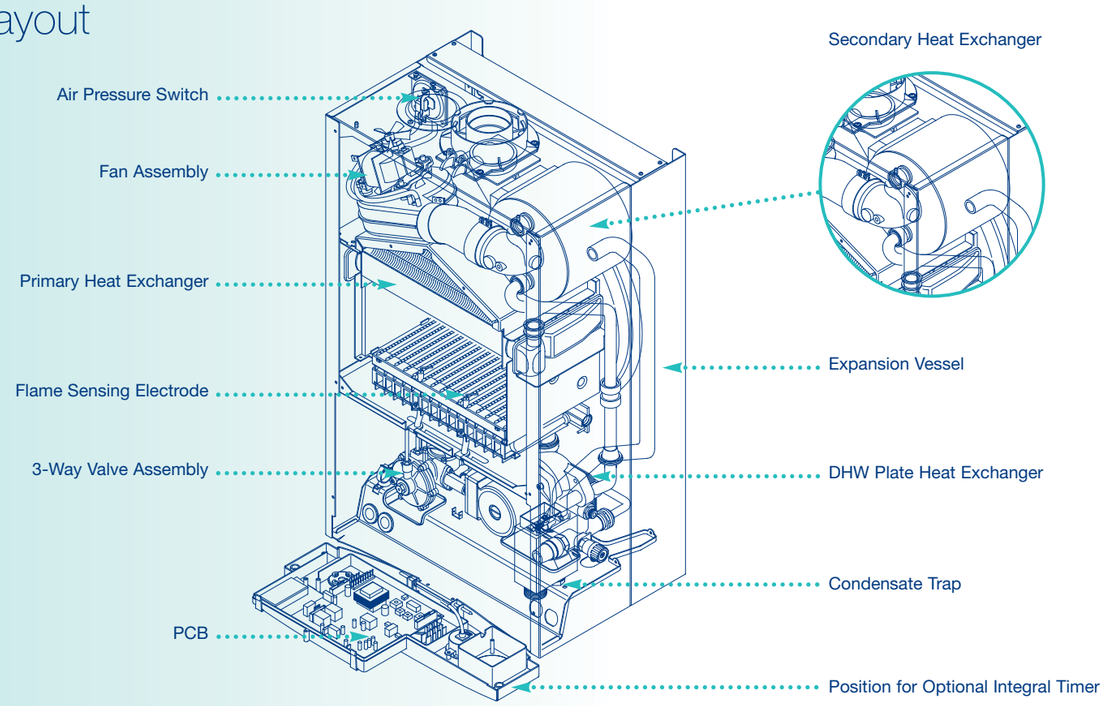

Pre-plumbing wall plate

Can be located in unventilated cupboards or compartments

3 — NO_x emissions class 3

Low lift weight of 44kg

B — SEDBUK 87.3% Band B

Fully modulating outputs from 11.3 to 31kW to CH

Dimensions and minimum clearance mm

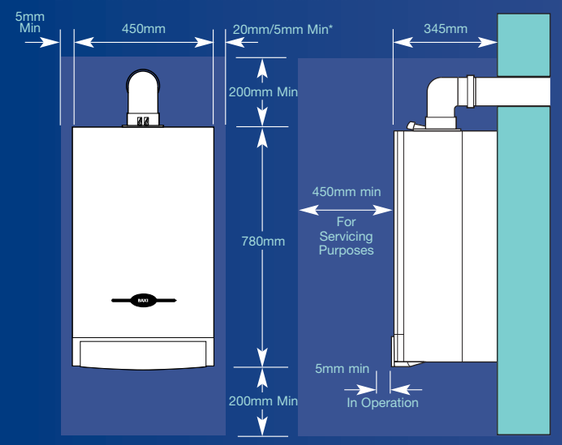

*NOTE: The boiler can be operated with a clearance of 5mm at the right. This is also sufficient for routine maintenance. However a clearance of 20mm is required if it is necessary to remove the secondary heat exchanger. This should be considered when siting the appliance and in the event of any subsequent alterations in the area of installation

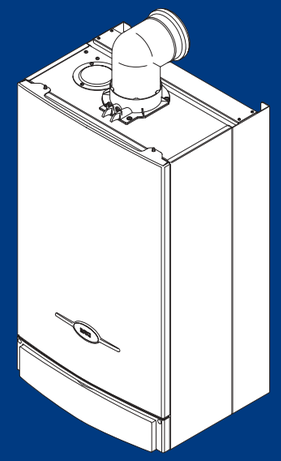

Technical information	Baxi Combi 105 HE
Max Continuous DHW flow rate raised 35°C	12.1
LPG conversion kit	Optional
Integral 12hr am/pm electro-mechanical timer kit	Optional
Integral 7 day electronic timer kit	Optional
Concealed user controls	Yes
Operating mode selector switch with reset	Yes
User adjustable DHW temperature	Yes
User adjustable central heating temperature	Yes
10 LED temperature/status/fault diagnosis display	Yes
Seasonal Efficiency (SEDBUK) Rating	Band B
Suitable for unventilated compartments	Yes
Automatic modulation of CH heat output	11.3 kW to 31 kW
Max heat input CH and DHW modes	30.5 kW
Max gas rate	3.22 m^3/h
Min DHW flow rate	2.5 litres
Min DHW operating pressure	0.2 bar
Max DHW operating pressure	8 bar
Safety discharge pressure	3 bar
Automatic bypass	Yes
Max capacity of CH system	125 litres
Filling loop	Optional
Electrical supply	230 Volts/50 Hz
Power consumption	180 Watts
Electrical protection	IPX5D
Electronic ignition	Yes
Frost protection	Yes
24hr pump exercise	Yes
Concentric flue terminal diameter	100mm
Standard concentric flue length (installed)	685mm
Max concentric horizontal flue length (equivalent)	3m
Max concentric vertical flue length (equivalent)	3m
Max twin tube horizontal flue length (equivalent)	24

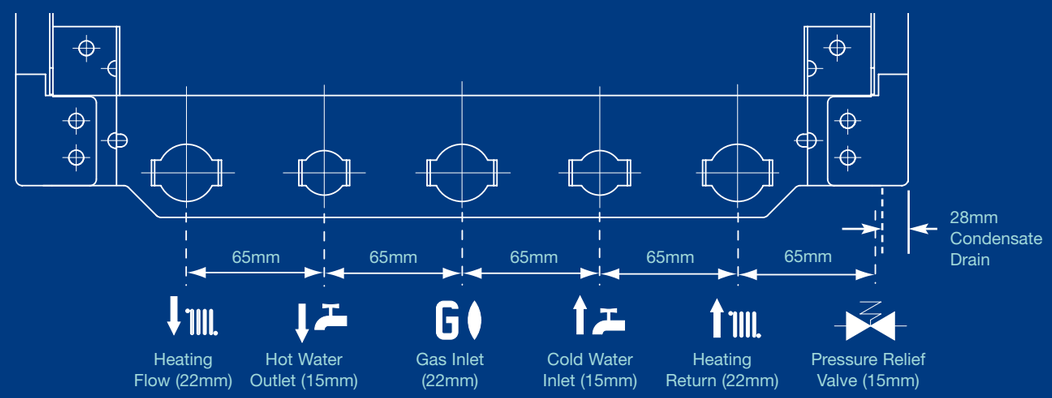

Baxi Combi HE flues & accessories

		mm
A*	Directly below an openable window, air vent or any other ventilation opening.	300
B	Below gutter, drain/soil pipe.	25
C	Below eaves.	25
D	Below a balcony/carport roof.	25
E	From vertical drain pipes and soil pipes.	25
F	From internal or external corners.	25
G	Above adjacent ground or balcony level.	300
H	From a surface facing a terminal.	600
I	Facing a terminal.	1200
J	From opening (door/window) in carport into dwelling.	1200
K	Vertically from a terminal on the same wall.	1500
L	Horizontally from a terminal on the same wall.	300
M*	Above an opening, air brick, opening window etc.	300
N*	Horizontally to an opening, air brick, opening window etc.	300

* In addition, the terminal should be no nearer than 150mm to an opening in the building fabric formed for the purpose of accommodating a built-in element such as a window frame. See BS 5440 Pt. 1.

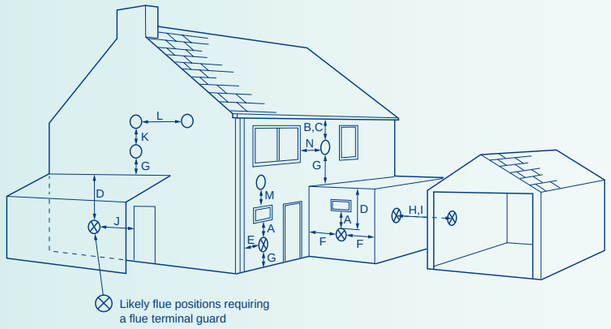

NOTE 1: The distance from a fanned draught appliance terminal installed parallel to a boundary may not be less than 300mm in accordance with the diagram opposite

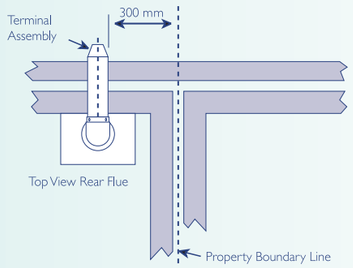

Key	Accessory	Specifications		Baxi code no
	Concentric Flue Accessories	Length/Angle	Diameter	
A	Standard Horizontal Concentric Flue Kit	750mm	100mm	5111073
B	Concentric Flue Extension Kit	1000mm	100mm	5111074
C	Concentric Flue Bend Kit	93°	100mm	5111075
D	Concentric Flue Bend Kit	135°	100mm	5111076
D	Concentric Flue bend Kit (Pair)	135°	100mm	5111085
	Concentric Flue Internal Fixing Kit/Wall Liner		100mm	5111067
	Concentric Flue Terminal Deflector		100mm	5111068
E	Concentric Flue Vertical Adaptor (Terminal)		100/125mm	5111070
F	Concentric Roof Cover Plate Kit			246143
	Concentric Pipe Support		100mm	5111080
	Twin Pipe Flue Accessories			
G	Twin Pipe Extension (Pair)	1000mm	80mm	5111087
H	Twin Pipe Flue Bend Kit (Pair)	90°	80mm	5111072
J	Twin Pipe Flue Bend Kit (Pair)	135°	80mm	5111086
L	Twin Pipe Flue Adaptor (Vertical Terminal)		80/125mm	5111084
	Twin Pipe Support (Pair)		80mm	5111081
M	Twin Pipe Boiler Adapter Kit		80mm	5111079
	Universal Flue Accessories			
N	Vertical Flue Terminal		125mm	5111078
P	Universal Flat Roof Flashing		125mm	246144
Q	Universal Roof Tile	25/45°	125mm	246141
R	Universal Roof Tile	35/55°	125mm	246142
	Additional Accessories			
	LPG Conversion Kit			5113144
	Filling Loop Kit			248221
	Integral 24hr Elec/Mec Timer Kit			247206
	Integral 7 Day Electronic Timer Kit			247207

Horizontal flues

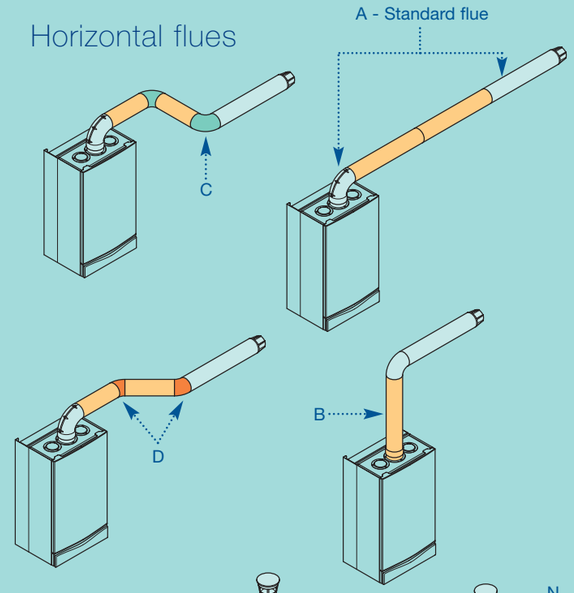

Vertical flues (Twin Pipe)

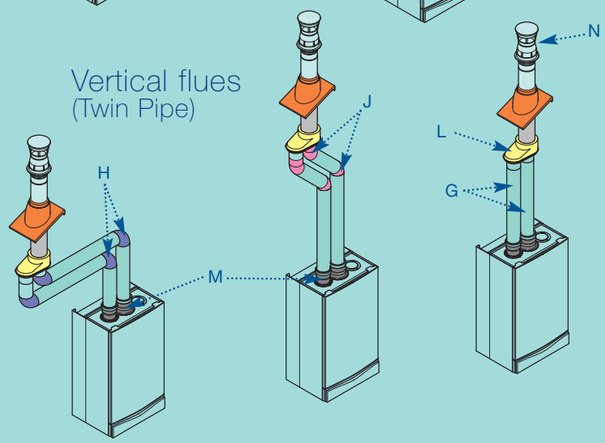

Vertical flues

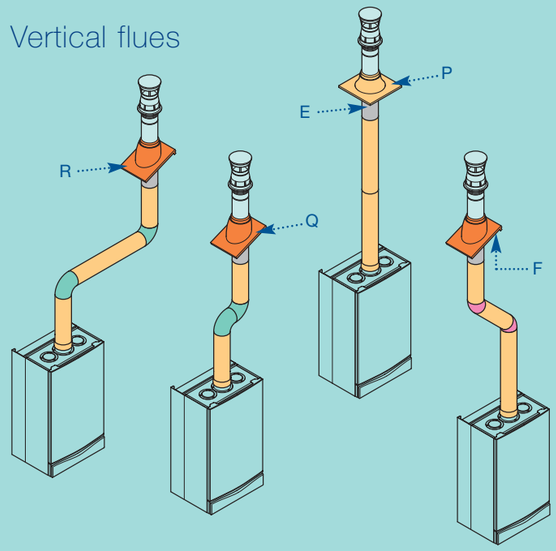

Flue options

1. The Baxi Combi Instant 80 HE, Baxi Combi Instant 105 HE and Baxi Combi 105 HE can be fitted with flue systems as illustrated.

2. The standard flue is suitable only for horizontal applications.

3. Maximum permissible equivalent flue lengths are:-

	Instant 80 HE	Instant 105 HE	Baxi 105 HE
Concentric	4m	3m	3m
Vertical	4m	3m	3m
Vertical Two-Pipe	12m	12m	12mm

4. Any additional "in line" bends in the flue system must be taken into consideration. Their equivalent lengths are:-

Concentric Pipes:		
	135° bend	0.5m
	93° bend	1.0m
Twin Flue Pipe		
	135° bend	0.25m
	90° bend	0.50m

The elbow supplied with the standard horizontal flue is not included in any equivalent length calculations.

General principles

Flue systems must be constructed using the Baxi accessories approved for the particular product and installed in accordance with BS5440 part 1 - flues.

This information is provided for guidance only and is not an intended substitute for Installation Instructions, copies of which are included with the product and also available on request.

Note: These are general illustrations only - detailing of actual components will vary from model to model. For clarity, on occasions items have been labelled once only.